SECTION FSU
FRONT SUSPENSION

CONTENTS

PRECAUTIONS 2
Caution 2
PREPARATION 3
Special Service Tools [SST] 3
Commercial Service Tools 4
NOISE, VIBRATION AND HARSHNESS (NVH) TROUBLESHOOTING 5
NVH Troubleshooting Chart 5
FRONT SUSPENSION ASSEMBLY 6
On-Vehicle Inspection and Service 6
INSPECTION OF TRANSVERSE LINK BALL JOINT END PLAY 6
STRUT INSPECTION 6
Wheel Alignment Inspection 6
DESCRIPTION 6
PRELIMINARY CHECK 6
INSPECTION OF CAMBER, CASTER AND KINGPIN INCLINATION ANGLES 6
Components 8
Remove and Installation 9
REMOVAL 9
INSTALLATION 9
COIL SPRING AND STRUT 11
Removal and Installation 11
REMOVAL 11
INSTALLATION 11
Disassembly and Assembly 12
DISASSEMBLY 12
INSPECTION AFTER DISASSEMBLY 12
ASSEMBLY 13
TRANSVERSE LINK 14
Removal and Installation 14
REMOVAL 14
INSPECTION AFTER REMOVAL 15
INSTALLATION 15
STABILIZER BAR 16
Removal and Installation 16
REMOVAL 16
INSPECTION AFTER REMOVAL 16
INSTALLATION 16
FRONT SUSPENSION MEMBER 17
Removal and Installation 17
REMOVAL 17
INSPECTION AFTER REMOVAL 17
INSTALLATION 17
SERVICE DATA AND SPECIFICATIONS (SDS) 18
Wheel Alignment (Unladen) 18
Ball Joint 18
Wheelarch Height (Unladen*) 18

PRECAUTIONS

PFP:00001

Caution

AES000WV

- When installing rubber bushings, final tightening must be performed under unladen conditions with tires on ground. Oil will shorten the life of rubber bushings. Be sure to wipe off any spilled oil.
  – Unladen conditions mean that fuel, engine coolant and lubricant are full. A spare tire, a jack, hand tools and mats are in designated positions.
- After servicing suspension parts, be sure to check wheel alignment.
- Self-lock nut are not reusable. Always use new ones when installing. Since new self-lock nuts are pre-oiled, tighten as they are.

PREPARATION

PFP:00002

Special Service Tools [SST]

AES000WW

Tool number (Kent-Moore No.) Tool name		Description
KV991040S0 (–) CCK gauge attachment 1. Plate 2. Guide bolts 3. Nuts 4. Springs 5. Center plate 6. KV99104020 Adapter A a: 72 mm (2.83 in) dia. 7. KV99104030 Adapter B b: 65 mm (2.56 in) dia. 8. KV99104040 Adapter C c: 57 mm (2.24 in) dia. 9. KV99104050 Adapter D d: 53.4 mm (2.102 in) dia.	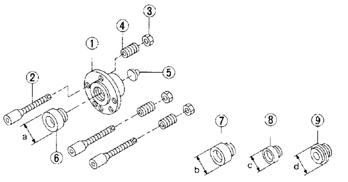 S-NT498	Measuring wheel alignment
HT72520000 (J-25730-A) Ball joint remover a: 33 mm (1.30 in) b: 50 mm (1.97 in) r: 11.5 mm (0.453 in)	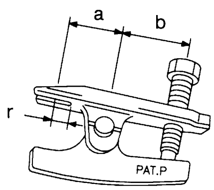 NT546	Removing steering outer socket
ST35652000 (–) Strut attachment	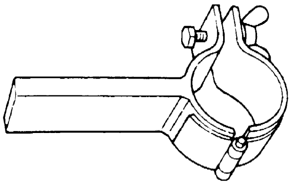 ZZA0807D	Disassembling and assembling strut
ST3127S000 (See J-25742-1) Preload gauge 1. GG91030000 (J-25765) Torque wrench 2. HT62940000 (–) Socket adapter (1/2″) 3. HT62900000 (–) Socket adapter (3/8″)	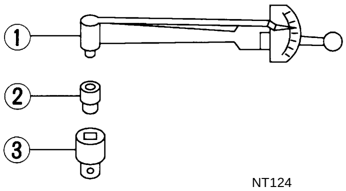 NT124	Measuring rotating torque of ball joint

Commercial Service Tools

AES000WX

Tool name		Description
Power tool	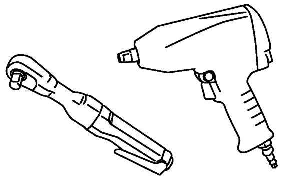 PBIC0190E	● Removing wheel nuts ● Removing torque member fixing bolts ● Removing stabilizer connecting rod
Spring compressor	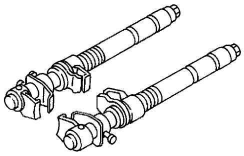 S-NT717	Removing and installing coil spring

NOISE, VIBRATION AND HARSHNESS (NVH) TROUBLESHOOTING

PFP:00003

NVH Troubleshooting Chart

AES000WY

Use chart below to help you find the cause of the symptom. If necessary, repair or replace these parts.

Reference page			FSU-8	FSU-12	—	—	—	FSU-8	FSU-6	FSU-16	NVH in PR section	NVH in RFD section	NVH in FAX and FSU sections	NVH in WT section	NVH in WT section	NVH in FAX section	NVH in BR section	NVH in PS section
Possible cause and Suspected parts			Improper installation, looseness	Strut deformation, damage or deflection	Bushing or mounting deterioration	Parts interference	Spring fatigue	Suspension looseness	Incorrect wheel alignment	Stabilizer bar fatigue	PROPELLER SHAFT	DIFFERENTIAL	FRONT AXLE AND FRONT SUSPENSION	TIRES	ROAD WHEELS	DRIVE SHAFT	BRAKES	STEERING
Symptom	Front suspension	Noise	×	×	×	×	×	×			×	×	×	×	×	×	×	×
		Shake	×	×	×	×		×			×		×	×	×	×	×	×
		Vibration	×	×	×	×	×				×		×	×		×		×
		Shimmy	×	×	×	×			×				×	×	×		×	×
		Judder	×	×	×								×	×	×		×	×
		Poor quality ride or handling	×	×	×	×	×		×	×			×	×	×			

×: Applicable

FRONT SUSPENSION ASSEMBLY

PFP:54010

On-Vehicle Inspection and Service

AES000WZ

Make sure that the mounting conditions (looseness, back lash) of each of the components and the component conditions (wear, damage) are normal.

INSPECTION OF TRANSVERSE LINK BALL JOINT END PLAY

1. Set front wheels in a straight-ahead position. Do not depress brake pedal.
2. Place an iron bar or similar tool between transverse link and steering knuckle.
3. Measure axial end play by prying it up and down.

Axial end play : 0 mm (0 in)

CAUTION:

Be careful not to damage ball joint boot. Do not damage the installation position by applying excessive force.

STRUT INSPECTION

Check for oil leakage, damage, and breakage of installation positions.

Wheel Alignment Inspection

AES000X0

DESCRIPTION

Measure wheel alignment under unladen conditions.

NOTE:

“Unladen” conditions mean that fuel, engine coolant, and lubricant are full. A spare tire, a jack, hand tools and mats are in designated positions.

PRELIMINARY CHECK

Check the following:

1. Tires for improper air pressure and wear.
2. Road wheels for runout. Refer to WT-4, "ROAD WHEEL" .
3. Wheel bearing axial end play. Refer to FAX-7, "WHEEL BEARING INSPECTION" .
4. Transverse link ball joint axial end play. Refer to FSU-15, "INSPECTION AFTER REMOVAL" .
5. Strut operation.
6. Each mounting point of axle and suspension for looseness and deformation.
7. Each of suspension member, steering knuckle, strut and transverse link for cracks, deformation and other damage.
8. Vehicle height (posture).

INSPECTION OF CAMBER, CASTER AND KINGPIN INCLINATION ANGLES

- Camber, caster, kingpin inclination angles cannot be adjusted.
- Before inspection, mount wheels onto turning radius gauge. Mount rear wheels onto a stand that has same height so vehicle will remain horizontal.

Using a CCK Gauge

Install the CCK gauge attachment [SST: KV991040S0 (–)] with the following procedure on wheel, then measure wheel alignment.

1. Remove three wheel nuts, and install the guide bolts to the hub bolt.
2. Screw the adapter into plate until it contacts the plate tightly.
3. Screw the center plate into the plate.
4. Insert the plate assembly on the guide bolt. Put the spring in, and then evenly screw the three guide nuts. When fastening the guide nuts, do not completely compress the spring.

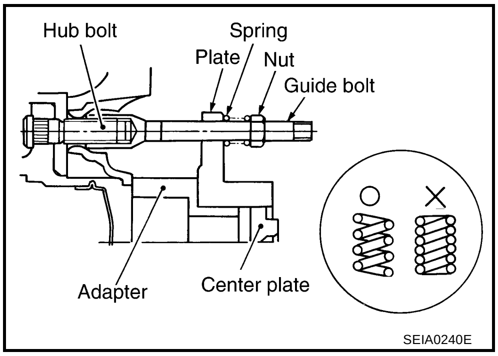

5. Place the dent of alignment gauge onto the projection of the center plate and tightly contact them to measure.

Camber, caster, kingpin inclination angles:

Refer to FSU-18, "SERVICE DATA AND SPECIFICATIONS (SDS)" .

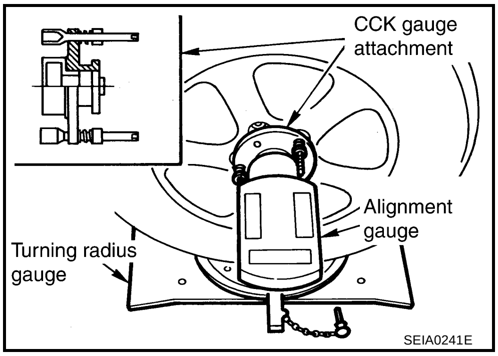

CAUTION:
If camber, caster, or kingpin inclination angle is outside the standard, check suspension member, steering knuckle, strut and transverse link for wear and damage. Replace suspect parts if necessary.

Toe-In Inspection

Measure toe-in using the following procedure.

WARNING:

- **Always perform the following procedure on a flat surface.**
- **Make sure that no person is in front of vehicle before pushing it.**

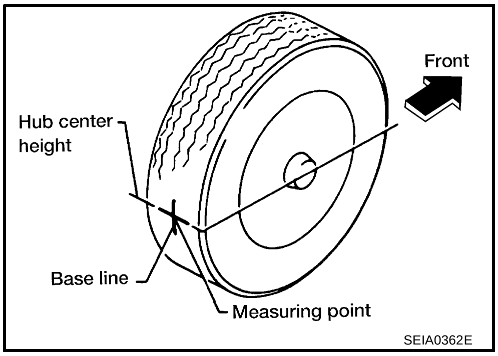

1. Bounce front of vehicle up and down to stabilize vehicle height (posture).
2. Push vehicle straight ahead about 5 m (16 ft).
3. Put a mark on base line of the tread (rear side) of both tires at the same height of hub center. These are measuring points.

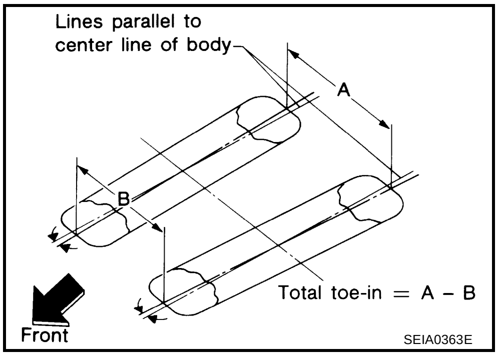

4. Measure distance “A” (rear side).
5. Push vehicle slowly ahead to rotate wheels 180° degrees (1/2 turn).

   NOTE:
   If the wheels have rotated more than 180° degrees (1/2 turn), start this procedure again from the beginning. Do not push vehicle backward.
6. Measure distance “B” (front side).

Total toe-in : **Refer to FSU-18, "SERVICE DATA AND SPECIFICATIONS (SDS)" .**

Components

AES000X1

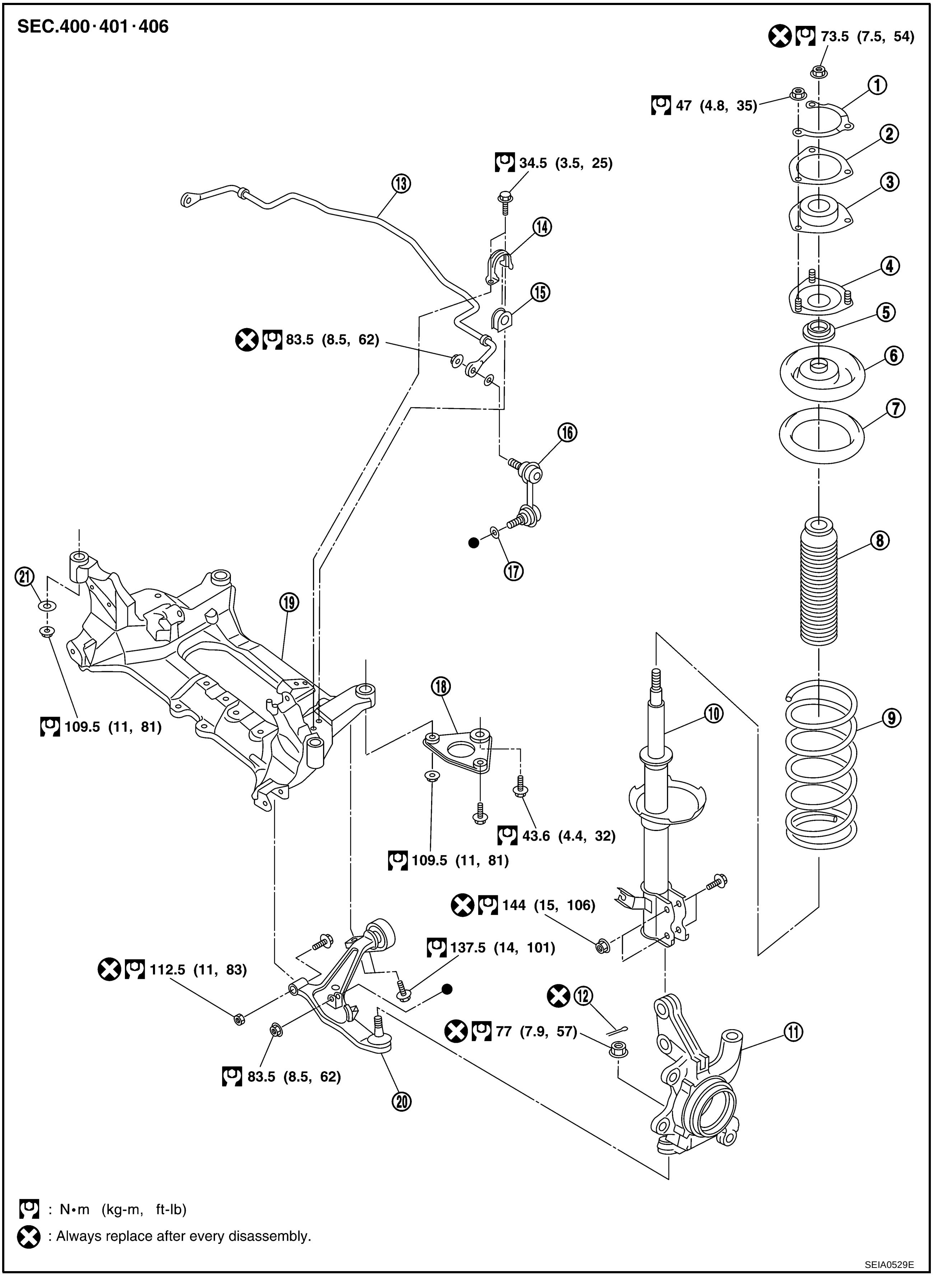

1.	Strut upper plate	2.	Strut spacer	3.	Strut mounting insulator
4.	Strut mounting insulator bracket	5.	Mounting bearing	6.	Spring upper seat
7.	Spring upper rubber seat	8.	Bound bumper	9.	Coil spring
10.	Strut	11.	Steering knuckle	12.	Cotter pin
13.	Stabilizer bar	14.	Stabilizer clamp	15.	Stabilizer bushing
16.	Stabilizer connecting rod	17.	Washer	18.	Member stay
19.	Front suspension member	20.	Transverse link	21.	Stopper

A B C D FSU F G H I J K L M

Remove and Installation

AES000XZ

REMOVAL

1. Remove tires from vehicle with a power tool.
2. Remove wheel sensor from steering knuckle. Refer to BRC-36, "WHEEL SENSORS" .

   CAUTION:
   Do not pull wheel sensor harness.
3. Remove torque member fixing bolts with a power tool. Hang torque member in a place where it will not interfere with work. Refer to BR-25, "FRONT DISC BRAKE" .

   NOTE:
   Avoid depressing brake pedal while brake caliper is removed.
4. Remove disc rotor. Refer to FAX-7, "FRONT WHEEL HUB AND KNUCKLE" .
5. Remove mounting rubber bracket from front suspension member. Refer to EX-2, "EXHAUST SYSTEM" .
6. Support engine or transmission with a jack.
7. Remove center member from vehicle. Refer to AT-269, "TRANSAXLE ASSEMBLY" .
8. Remove the fixing bolts and nuts, and then remove strut assembly from steering knuckle.

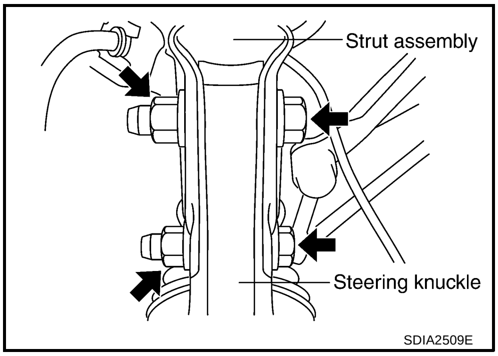

9. Remove drive shaft from vehicle. Refer to FAX-13, "FRONT DRIVE SHAFT" .
10. Remove stabilizer bar from suspension member. Refer to FSU-16, "Removal and Installation" .
11. Remove power steering tube bracket mounting bolts, nuts and steering outer socket, then hang steering gear on vehicle. Refer to PS-17, "POWER STEERING GEAR AND LINKAGE" .
12. Set a jack under front suspension member.
13. Remove rear engine mounting insulator from front suspension member. Refer to EM-73, "ENGINE ASSEMBLY" .
14. Remove mounting bolts and nut of member stay, and then remove member stay from vehicle.

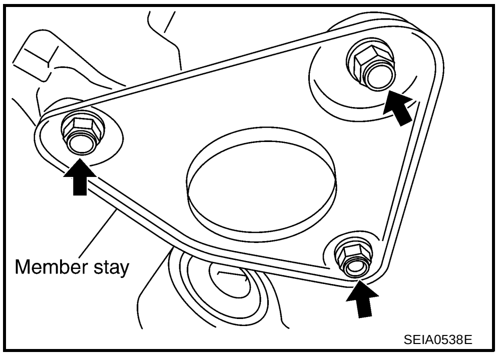

15. Remove mounting nuts and stoppers between front suspension member and body. Gradually lower jack to remove front suspension assembly.

INSTALLATION

- Install in the reverse order of the removal. For tightening torque, refer to FSU-8, "Components" .

  NOTE:
  Do not reuse non-reusable parts.
- Perform the final tightening of each of parts, under unladen conditions, which were removed when removing front suspension assembly. Check the wheel alignment. Refer to FSU-6, "Wheel Alignment Inspection" .

- Adjust neutral position of steering angle sensor after checking the wheel alignment for model with VDC. Refer to BRC-43, "Adjustment of Steering Angle Sensor Neutral Position" .
- Check wheel sensor harness for proper connection. Refer to BRC-36, "WHEEL SENSORS" .

COIL SPRING AND STRUT

PFP:55302

Removal and Installation

AES000X2

REMOVAL

1. Remove tires from vehicle with a power tool.
2. Remove harness of wheel sensor from strut assembly. Refer to BRC-36, "WHEEL SENSORS" .

   CAUTION:

   Do not pull on wheel sensor harness.
3. Remove torque member fixing bolts with a power tool. Hang torque member in a place where it will not interfere with work. Refer to BR-25, "FRONT DISC BRAKE" .

   NOTE:

   Avoid depressing brake pedal while brake caliper is removed.
4. Remove lock plate and brake hose from strut assembly. Refer to BR-12, "Removal and Installation of Front Brake Piping and Hose" .
5. Remove disc rotor. Refer to FAX-7, "FRONT WHEEL HUB AND KNUCKLE" .
6. Remove fixing bolts and nuts, and then remove strut assembly from steering knuckle.
7. Remove the mounting nuts of strut mounting insulator bracket, then remove strut assembly from vehicle.

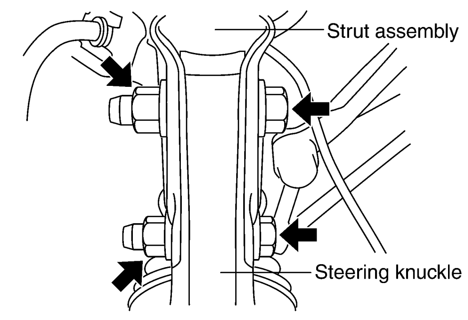

SDIA2509E

INSTALLATION

- Install in the reverse order of the removal. For tightening torque, refer to FSU-8, "Components" .

  NOTE:

  Do not reuse non-reusable parts.
- Perform the final tightening of each of parts, under unladen conditions, which were removed when removing coil spring and strut. Check the wheel alignment. Refer to FSU-6, "Wheel Alignment Inspection" .
- Adjust neutral position of steering angle sensor after checking the wheel alignment for model with VDC. Refer to BRC-43, "Adjustment of Steering Angle Sensor Neutral Position" .
- Check wheel sensor harness for proper connection. Refer to BRC-36, "WHEEL SENSORS" .
- Be sure triangular marks on strut mounting insulator and spring upper seat are positioned as shown. Also be sure notch in strut spacer is positioned as shown.
- Assemble strut upper plate with it’s notch facing toward the outside of vehicle.

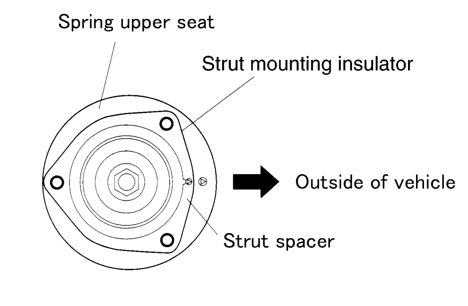

SEIA0123E

Disassembly and Assembly

AES000X3

DISASSEMBLY

CAUTION:

Do not damage strut piston rod when removing components from strut.

1. Install the strut attachment [SST] to strut and secure it in a vise.

   CAUTION:

   Wrap a shop cloth around strut to protect it from damage when installing the strut attachment [SST] to strut.

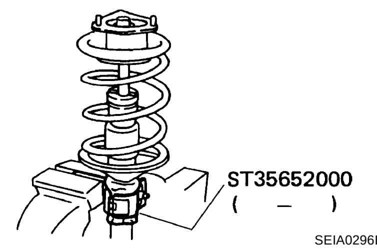

SEIA0296E

2. Compress coil spring using a spring compressor (commercial service tool) until coil spring with the compressor is free.

   CAUTION:

   Start compressing coil spring after making sure that the compressor is completely attached to coil spring.

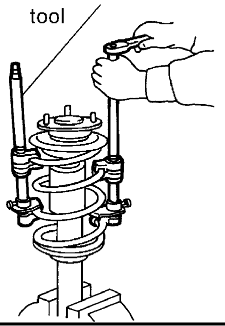

SEIA0297E

3. Make sure that coil spring with the compressor is free between spring upper rubber seat and lower spring seat (strut), and then remove piston rod lock nut while securing the end of piston rod so as not to rotate piston rod.
4. Remove strut mounting insulator bracket, mounting bearing, spring upper seat, spring upper rubber seat, bound bumper from strut.
5. Remove coil spring with the compressor, and then gradually release the compressor.

   CAUTION:

   Loosen the compressor while checking installation position so that compressor is installed to the correct position.

6. Remove the strut attachment [SST] from strut.

INSPECTION AFTER DISASSEMBLY

Strut Inspection

Check the following:

- Strut for deformation, cracks, and damage. Replace if there are.
- Piston rod for damage, uneven wear, and distortion. Replace if there are.
- For oil leakage. Replace if there are.

Mounting Insulator and Rubber Parts Inspection

Check mounting insulator for cracks and rubber parts for wear. Replace if there are.

Coil Spring Inspection

Check coil spring for cracks, wear, and damage. Replace if there are.

ASSEMBLY

CAUTION:

Do not damage strut piston rod when installing components to strut.

1. Install the strut attachment [SST: ST35652000 (–)] to strut and secure it in a vise.

   CAUTION:

   Wrap a shop cloth around strut to protect it from damage when installing the strut attachment [SST] to strut.

2. Compress coil spring using a spring compressor (commercial service tool), and install it onto strut.

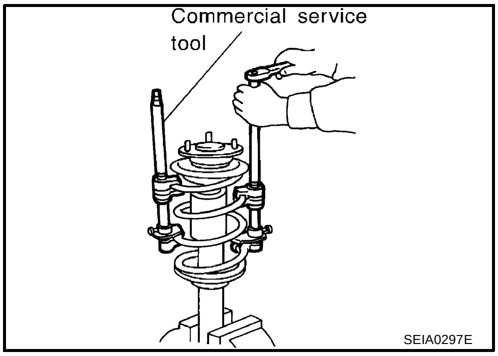

   CAUTION:

   - **Face large diameter side of coil spring downward. Align the lower end to lower spring seat as shown in the figure.**
   - **Start compressing coil spring after making sure that the compressor is completely attached to coil spring.**

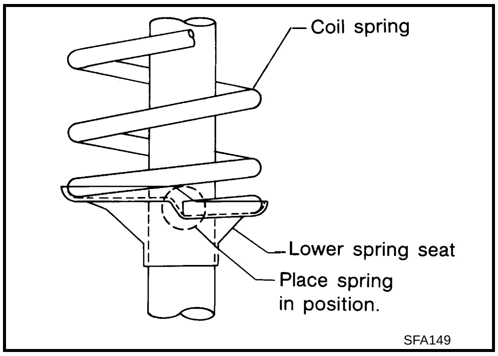

3. Apply soapy water to bound bumper. Insert bound bumper into spring upper seat, and then install it to strut together with spring upper rubber seat.
4. Install mounting insulator bracket and mounting bearing to strut.
5. Secure end of piston rod so as not to rotate piston rod. Tighten piston rod lock nut to the specified torque.
6. Gradually release compressor, and remove it from coil spring.

   CAUTION:

   Loosen a spring compressor while checking installation position so that coil spring is installed to the correct position.

7. Remove the strut attachment [SST] from strut.

TRANSVERSE LINK

PFP:54500

Removal and Installation

AES000X4

REMOVAL

1. Remove tires from vehicle with a power tool.
2. Remove cotter pin of transverse link and steering knuckle, and then loosen the nut.
3. Remove transverse link from steering knuckle so as not to damage ball joint boot using a ball joint remover [SST: HT72520000 (J-25730-A)].

   CAUTION:

   Temporarily tighten the nut to prevent damage to threads and to prevent the ball joint remover [SST: HT72520000 (J-25730-A)] from suddenly coming off.

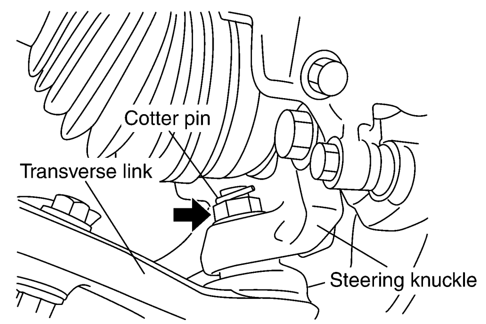

SDIA2511E

4. Remove the mounting nut and washer on the lower side of stabilizer connecting rod with a power tool. Remove stabilizer connecting rod from transverse link.

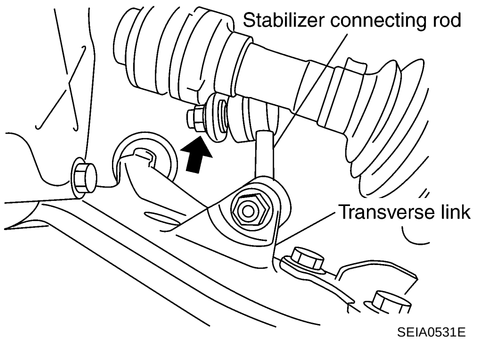

SEIA0531E

5. Remove mounting nut and bolts of transverse link.
6. Remove transverse link from vehicle.

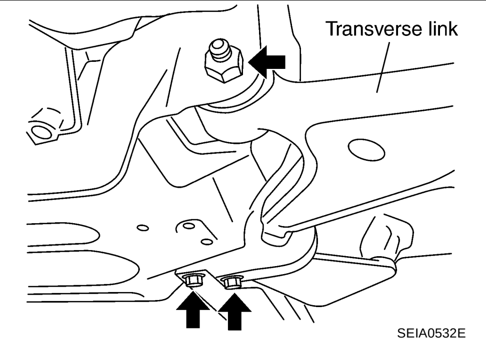

SEIA0532E

INSPECTION AFTER REMOVAL

Visual Inspection

- Check transverse link and bushing for deformation, cracks, and other damage. Replace transverse link if there are.
- Check ball joint boot for cracks, damage, and leakage of grease. Replace transverse link if there are.

Ball Joint Inspection

Manually move ball stud to confirm it moves smoothly with no binding.

Swing Torque Inspection

CAUTION:

Move the ball joint at least ten times by hand to check for smooth movement before measuring.

- Hook a spring balance at the cotter pin mounting hole. Make sure that the spring balance measurement value is within the specified range when ball stud begins moving.

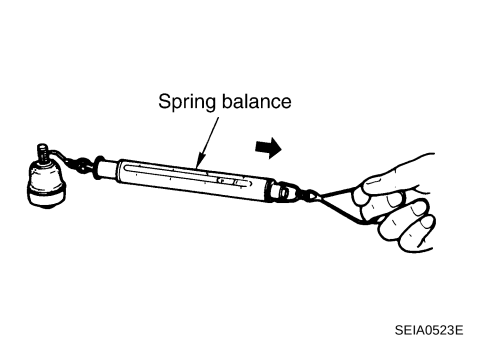

Swing torque
: 0.5 - 3.4 N·m (0.06 - 0.34 kg-m, 5 - 30 in-lb)

Spring balance measurement
: 7.94 - 53.97 N (0.81 - 5.50 kg, 1.79 - 12.2 lb)

- Replace transverse link if value is outside standard.

Rotating Torque Inspection

- Install the nut to the ball stud, and make sure that rotating torque is within the standard using the preload gauge [SST].

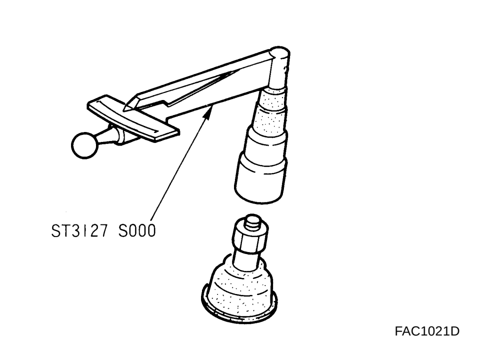

Rotating torque
: 0.5 - 3.4 N·m (0.06 - 0.34 kg-m, 5 - 30 in-lb)

- Replace transverse link if value is outside the standard.

Axial End Play Inspection

- Move tip of ball joint in the axial direction to check for looseness.

Axial end play : 0 mm (0 in)

- Replace transverse link if value is outside the standard.

INSTALLATION

- Install in the reverse order of the removal. For tightening torque, refer to FSU-8, "Components" .

  NOTE:

  Do not reuse non-reusable parts.
- Perform the final tightening of each of parts, under unladen conditions, which were removed when removing transverse link. Check the wheel alignment. Refer to FSU-6, "Wheel Alignment Inspection" .
- Adjust the neutral position of steering angle sensor after checking the wheel alignment for model with VDC. Refer to BRC-43, "Adjustment of Steering Angle Sensor Neutral Position" .

STABILIZER BAR

PFP:54611

Removal and Installation

AES000X5

REMOVAL

1. Remove tires from vehicle with a power tool.
2. Remove the mounting nut and washer on the lower side of stabilizer connecting rod with power tool. Remove stabilizer connecting rod from transverse link.
3. If necessary, remove mounting nut and washer on the upper side of stabilizer connecting rod with a power tool. Remove stabilizer connecting rod from stabilizer bar.

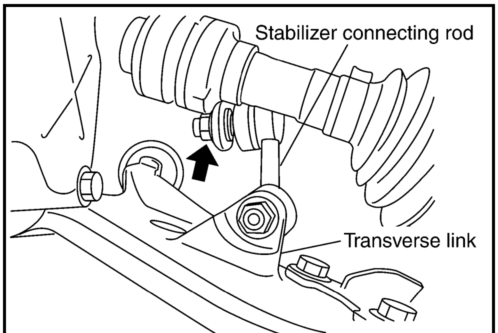

SEIA0533E

4. Remove mounting bolts of stabilizer clamp, and then remove stabilizer clamp and stabilizer bushing.
5. Remove stabilizer bar from vehicle.

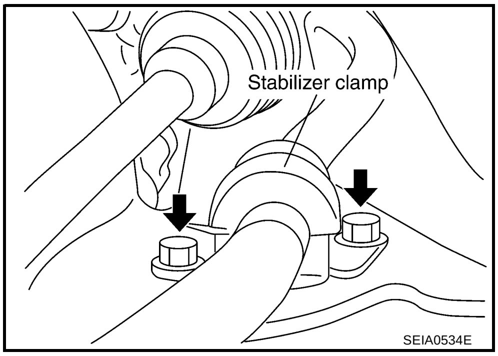

SEIA0534E

INSPECTION AFTER REMOVAL

Check stabilizer bar, stabilizer connecting rod, stabilizer bushing, and stabilizer clamp for deformation, cracks, and damage. Replace if there are.

INSTALLATION

- Install in the reverse order of the removal. For tightening torque, refer to FSU-8, "Components" .

FRONT SUSPENSION MEMBER

PFP:54401

Removal and Installation

AES000X6

REMOVAL

1. Remove tires from vehicle with a power tool.
2. Remove mounting bolts of stabilizer clamp, and then separate stabilizer bar and front suspension member, then hang stabilizer bar on vehicle.

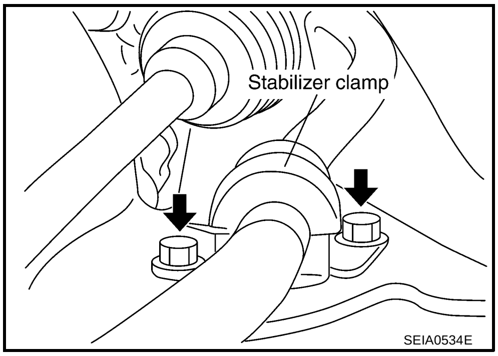

3. Remove transverse link from front suspension member. Refer to FSU-14, "TRANSVERSE LINK" .
4. Remove mounting rubber bracket from front suspension member. Refer to EX-2, "EXHAUST SYSTEM" .
5. Support engine or transmission with a jack.
6. Remove center member from vehicle. Refer to AT-269, "TRANSAXLE ASSEMBLY" .
7. Remove power steering tube bracket mounting bolts. Hang steering gear on vehicle. Refer to PS-17, "POWER STEERING GEAR AND LINKAGE" .
8. Remove rear engine mounting insulator from front suspension member. Refer to EM-73, "ENGINE ASSEMBLY" .
9. Set a jack under front suspension member.
10. Remove mounting bolts and nut of member stay, and then remove member stay from vehicle.

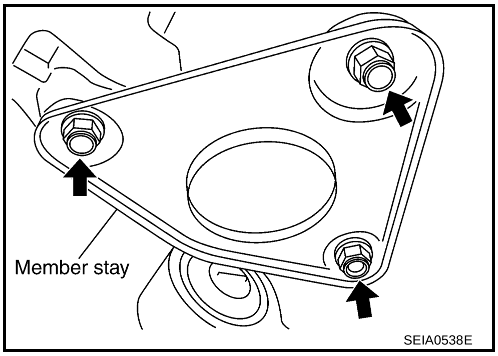

11. Remove mounting nuts and stoppers between front suspension member and body. Gradually lower jack to remove front suspension member from vehicle.

INSPECTION AFTER REMOVAL

Check front suspension member for deformation, cracks, or other damage. Replace if there are.

INSTALLATION

- Install in the reverse order of the removal. For tightening torque, refer to FSU-8, "Components" .

  NOTE:
  Do not reuse non-reusable parts.
- Perform the final tightening of each of part, under unladen conditions, which were removed when removing front suspension member. Check the wheel alignment. Refer FSU-6, "Wheel Alignment Inspection" .
- Adjust neutral position of steering angle sensor after checking the wheel alignment for model with VDC. Refer to BRC-43, "Adjustment of Steering Angle Sensor Neutral Position" .

SERVICE DATA AND SPECIFICATIONS (SDS)

PFP:00030

Wheel Alignment (Unladen)

AES000X7

Camber Degree minute (Decimal degree)		Minimum	– 0°54′ (– 0.9°)
		Nominal	– 0°24′ (– 0.4°)
		Maximum	0°36′ (0.6°)
		Left and right difference	45′ (0.75°)
Caster Degree minute (Decimal degree)		Minimum	1°42′ (1.7°)
		Nominal	2°27′ (2.45°)
		Maximum	3°12′ (3.2°)
		Left and right difference	45′ (0.75°)
Kingpin inclination Degree minute (Decimal degree)		Minimum	12°06′ (12.1°)
		Nominal	13°30′ (13.5°)
		Maximum	13°36′ (13.6°)
Total toe-in	Distance (A – B)	Minimum	0 mm (0 in)
		Nominal	1 mm (0.04 in)
		Maximum	2 mm (0.08 in)
	Angle (left plus right) Degree minute (degree)	Nominal	2′ (0.03°)

Ball Joint

AES000X8

Swing torque	0.5 - 3.4 N·m (0.06 - 0.34 kg-m, 5 - 30 in-lb)
Measurement on spring balance (cotter pin hole position)	7.94 - 53.97 N (0.81 - 5.50 kg, 1.79 - 12.2 lb)
Rotating torque	0.5 - 3.4 N·m (0.06 - 0.34 kg-m, 5 - 30 in-lb)
Axial end play	0 mm (0 in)

Wheelarch Height (Unladen*)

AES000X9

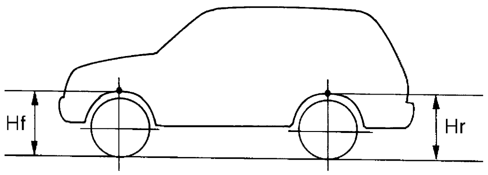

SFA746B

Applied model	2WD	AWD
Front (Hf)	774 mm (30.47 in)	773 mm (30.43 in)
Rear (Hr)	786 mm (30.94 in)	785 mm (30.91 in)

*: Fuel, engine coolant and engine oil full. Spare tire, jack, hand tools and mats are in designated positions.